DAH LIH MACHINERY INDUSTRY CO., LTD.
No. 3, Kung-Yeh Lane, Fengcheng Road, Nanshih Village,
Wufeng District, Taichung City, 41357, Taiwan.
TEL:886-4-23334567 FAX:886-4-23307567
E-mail:export.sale@dahlih.com.tw Http://www.dahlih.com.tw

022-D2-00-025

500, 02, 2015

MCV-860

MCV-1060

PORTAL TYPE MACHINING CENTER

MCV-1200

PT-128A

MCV-1250

MCV-1450

MCV-1680

MCV-1700

MCV-2100

MCV-2600

DCM-2213

MCH-630

The Latest and Best Quality Machinery.

DAHLIH®

Accuracy
Results from Our
Care to Every Detail

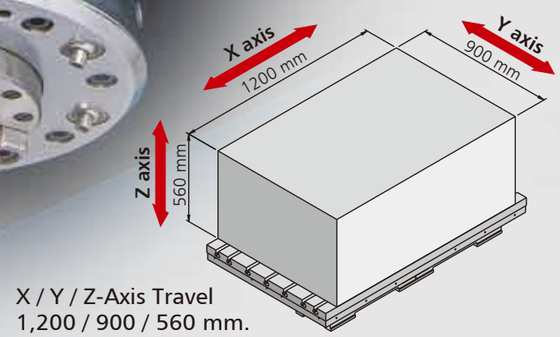

X / Y / Z-Axis Travel
1,200 / 900 / 560 mm.

PT-128A

PORTAL TYPE MACHINING CENTER

Outstanding Features:

» Double column construction exhibits exceptional stability in high speed machining.
» Choice of 12,000 or 15,000 rpm direct-drive spindle.
» X, Y, Z axes are all mounted with roller type linear motion guides featuring outstanding heavy load capacity.
» Rapid traverse rate on X, Y, Z-axes reach 30 m/min.
» Innovative thermal compensation function for spindle.

Applicable industries:

» Aerospace parts machining.
» Complex dies and mold machining.
» Precision parts machining.

Double Column Construction with Optional Thermal Suppression

» The symmetrical design of double column construction loads to an optimal thermal suppression features.
» Major structural parts are scientifically reinforced by cross-shaped ribs for stable accuracy and good rigidity while lightening structural weight.
» X,Y-axes are separately located on base and columns to eliminate overlapped load.
» The table is fully supported to eliminate overhang and displacement problems, while ensuring the highest machining accuracy.
» Linear motion guides on three axes features extra stable smooth motions and meet the requirement of high speed machining.

Ram Type Spindle Head
» The spindle head is a ram type design in order to minimize temperature rise and defection problem.

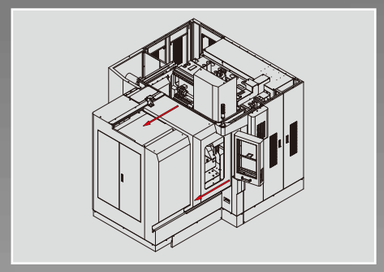

Open-Top Guard
» The machine top and front have fully opened doors, allowing the operator to load and unload workpiece with ease by hand or crane.

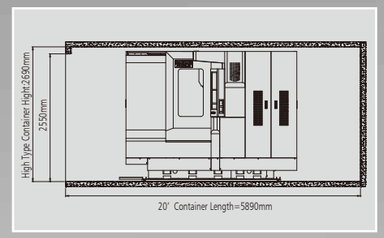

Container Loading able to Save Freight Costs
» The PT-128A can be directly fitted into a container for saving freight and reassembling time.

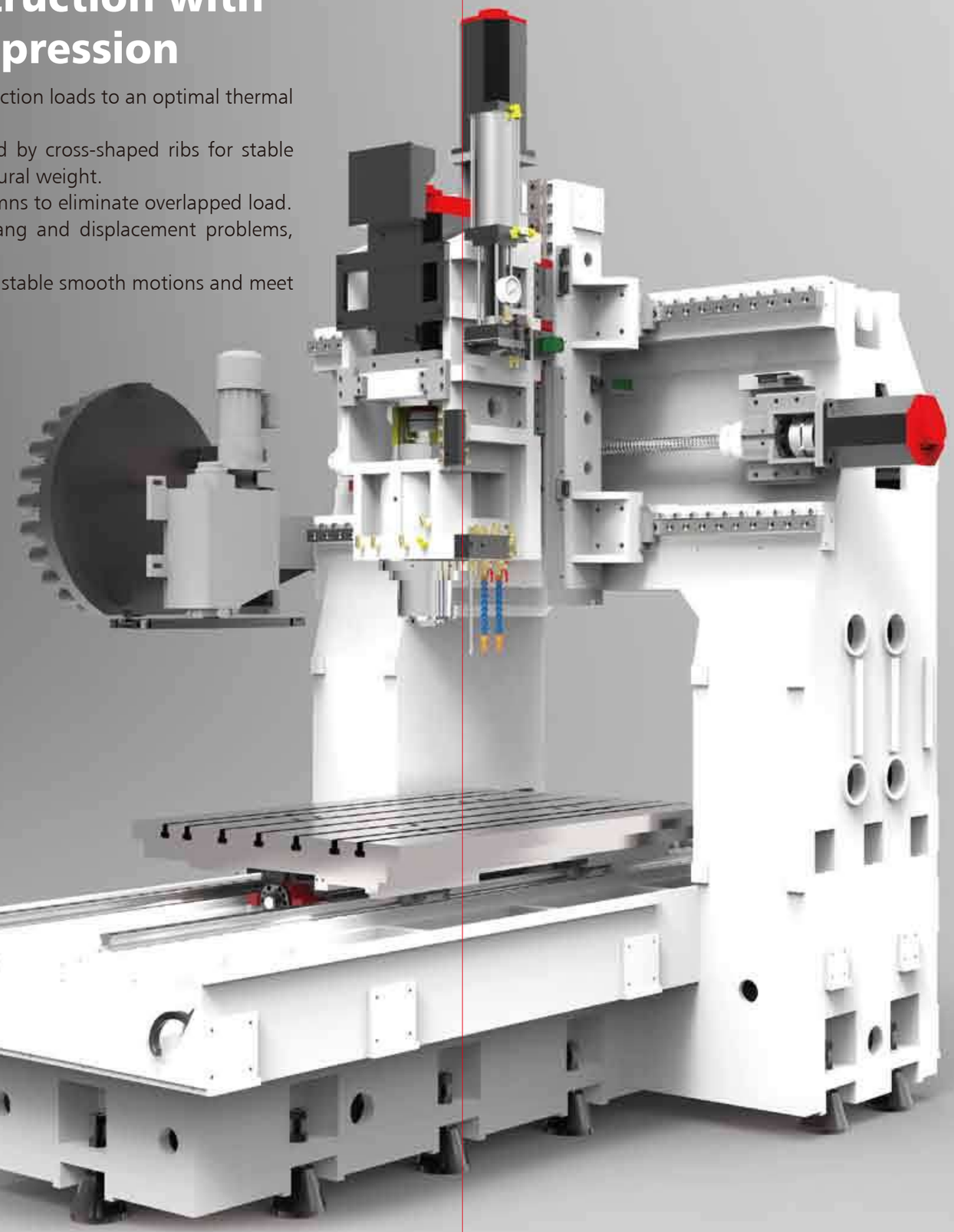

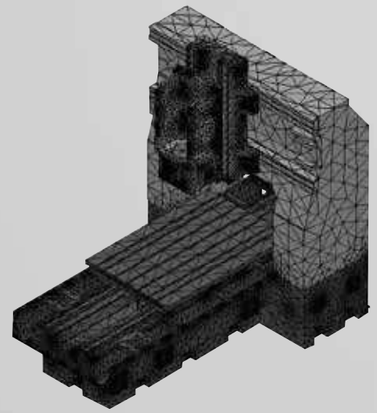

Finite Element Analysis
» To ensure the best structural rigidity and machine life, the major casting parts are analyzed by advanced "Finite Element Analysis" software to achieve an optimum design of structure.

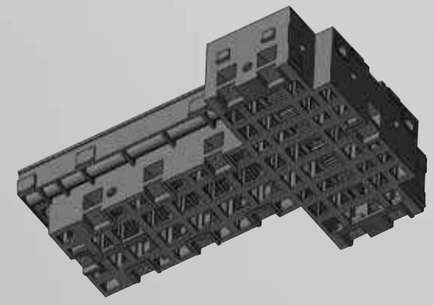

Three-Point Support Construction
» The base is three-point supported, providing a solid support for high speed, high precision machining.

Coolant through Ball Screw (Optional)
» Coolant through ball screws on the three axes effectively prevent thermal deformation, upgrade stability of feed system, while also ensuring highly accurate machining.

12,000/15,000 rpm Direct-Drive Spindle

With Lower Cost than that of a Built-in Type Spindle

Low Cost
» The high speed direct drive spindle is lower cost than that of a built-in type spindle.

Low Vibration & Low Noise
» The direct spindle is not affected by a side force that usually occurs on a belt drive spindle, therefore it helps to reduce vibration, noise and tool wear.

Convenient to Install and Maintain
» The direct drive spindle is easy to install. As the spindle and the motor is separated, its maintenance cost is lower than that of a built-in type spindle.

High Rigidity
» The inside diameter of spindle bearing is Ø70mm, featuring high rigidity to resist heavy cutting.

High Precision
» The temperature growth and motor heat of the direct-drive spindle have less affection in spindle head displacement than a belt-drive spindle, as such it can provide more stable machining accuracy.

12,000 rpm Direct-Drive Spindle

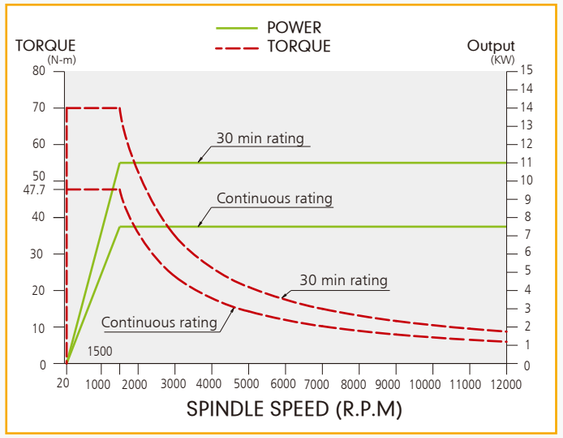

MACHINE DIMENSIONS

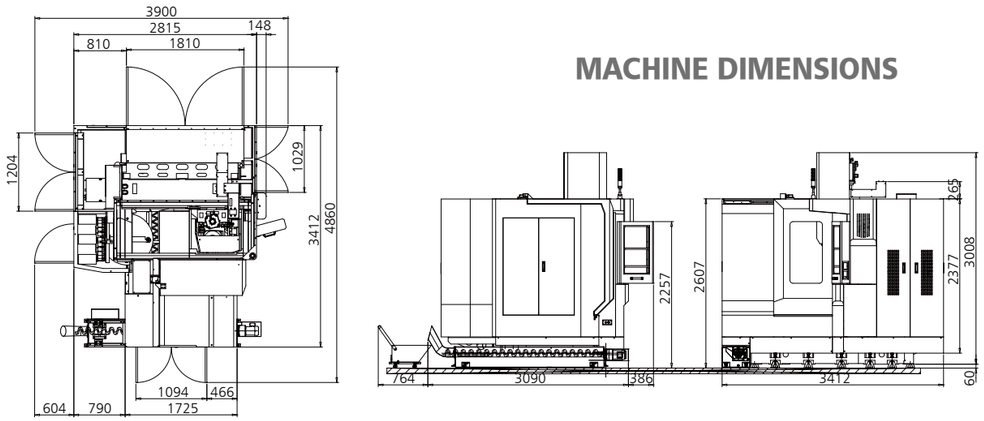

SPECIFICATIONS, ACCESSORIES AND DIMENSIONS

SPECIFICATIONS	
MODEL	**PT-128A**
TABLE	
Table work surface area (X axis × Y axis)	1350 x 900 mm
T-slot (W x no. x pitch)	18 x 5 x 125 mm
Max. table load	1600 kgw
Distance from table to floor	820 mm
TRAVEL	
X-axis travel	1200 mm
Y-axis travel	900 mm
Z-axis travel	560 mm
Dist. from spindle nose to table surface	150~710 mm
Distance between columns	1040 mm
Slideway type (X / Y / Z-axis)	Roller type linear way
X, Y, Z-axis tramsnission	Flexible type
FEED	
Rapid traverse rate (X / Y / Z-axis)	30 m/min, 30 m/min, 30 m/min
Cutting feed rate	1~20000 mm/min
Min. feed unit	0.001 mm
SPINDLE	
Spindle type	Direct-drive
Spindle motor (continuous rating/30 min.rating)	α 8/12000i, 11kW(14.7HP)
Spindle nose taper	N.T.40
Spindle speed	12000 rpm
Spindle bearing bore diameter	Ø70 mm
Cooling / Lubrication	Oil cooling / grease lub.
ATC (Automacic Tool Changer)	
Tool magazine capacity	24 tools
Tool shank type	BBT40
Pull stud	Jaw type 45° pulling head
Max. tool weight	7 kgw
Max. tool length	300 mm
Max. tool dia. (without adjacent tool)	Ø75 mm (Ø150 mm)
Tool selection	Random
CNC CONTROLLER	FANUC OiMD
OTHERS	
Power required	36KVA
Air pressure required (Air supply)	6 kg / cm^2
Coolant tank cappacity (Full / actual capacity)	300ℓ
Machine weight	13000 kgw
Space occupied	3900 x 4860 mm

Specifications are subject to change without prior notice.

» STANDARD
- Spindle cooling device
- Heat exchange
- Removable manual pulse generator
- X,Y,Z-axis roller type linear guide ways
- Screw type chip conveyor + chip wagon
- Call light (three layers)
- Work light
- Coolant and air gun
- Enclosed splash guard
- Tool kits

» OPTIONS
- 15,000 rpm direct-drive spindle
- 15,000 rpm built-in type spindle
- 20,000 rpm built-in type spindle
- Coolant through spindle device (15,30,50,70 bar)
- Coolant through ball screw on 3 axes
- Linear scales on 3 axes
- Oil mist device
- Oil mist collector
- Flat type chip conveyor + chip wagon
- Oil skimmer
- Automatic centering device
- Tool breakage detecting device
- Tool length measuring device
- Air conditioner for electrical cabinet

DAHLIH

DAH LIH MACHINERY INDUSTRY CO., LTD.

MCV-860

MCV-1060

MCV-1200

MCV-1250

MCV-1450

MCV-1680

MCV-1700

MCV-2100

MCV-2600

DCM-2213

MCH-630

The Latest and Best Quality Machinery.

DAHLIH®